GPS Active Antenna

JCA001

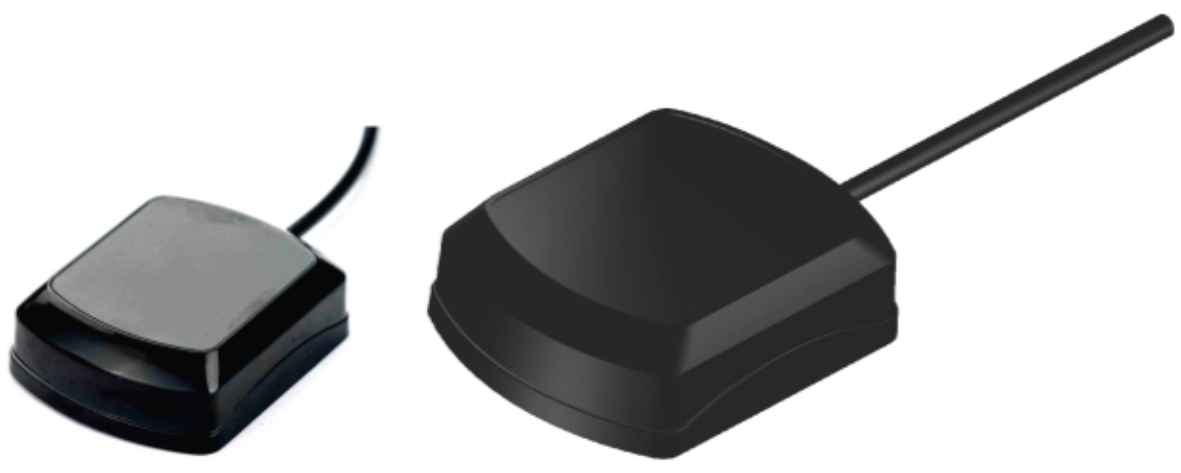

DIMENSIONS

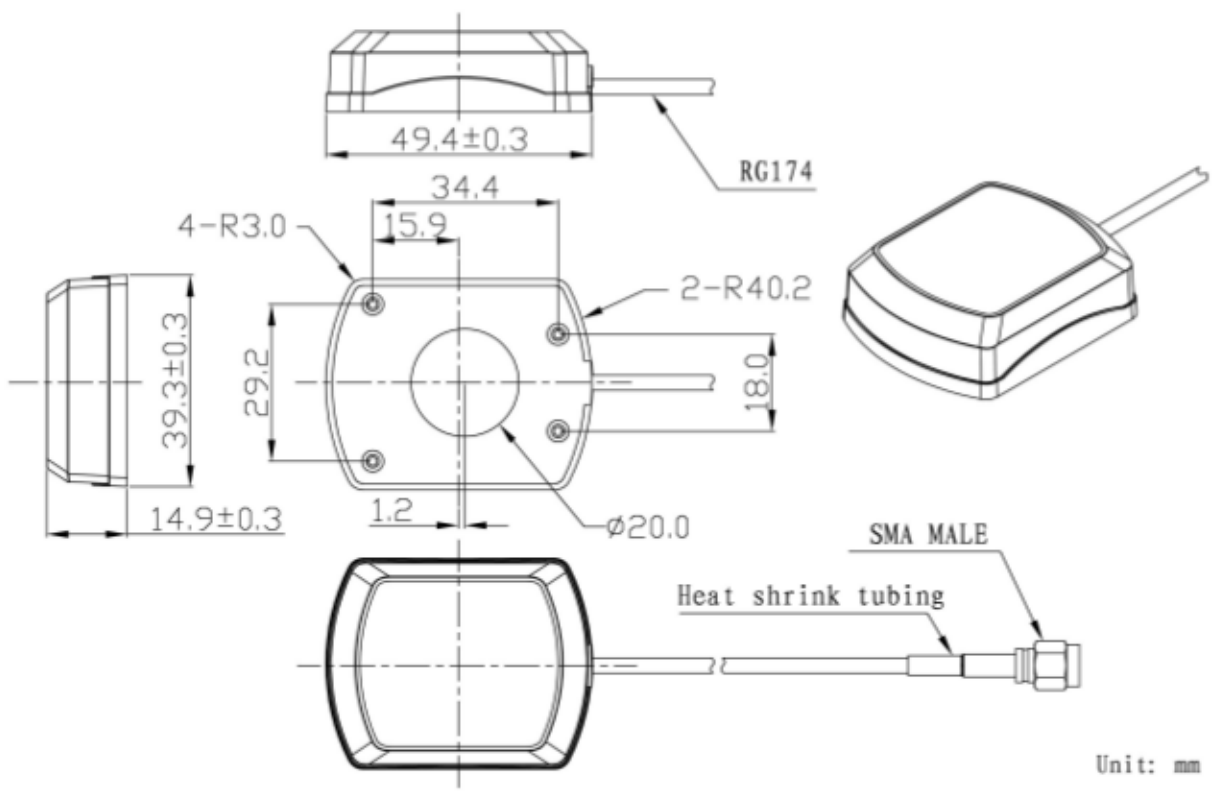

SPECIFICATIONS

Item		Specifications
Antenna	Center Frequency	1575.42±1MHz
	Band Width	CF±5MHz
	Polarization	RHCP
	Gain	2dBic（Zenith）
	V.S.W.R	<1.5
	Impendance	50Ω
	Axial Ratio	3dB（max）
	Dimension	25*25*4mm
LNA	Gain	28±2dB
	Noise Figure	<1.5
	Filter Insertion Loss	<3dB
	Ex-band Attenuation	12dB@CF+50MHz/16dB@CF-50MHz
	Supply Voltage	2.2~5V DC
	Current Consumption	5~15mA
	V.S.W.R	<2.0
Mechanical	Cable	RG174
	Connector	SMA/MCX/FAKRA or others
	Radome Material	ABS
	Mounting Method	Magnet/Adhesive
Environmental	Operating Temperature	-40℃~+85℃
	Relative Humidity	Up to 95%
	Ingress Protection	IP65~IP67
	Vibration	10 to 55Hz with 1.5mm amplitude 2hours
	Environmentally Friendly	ROHS Compliant
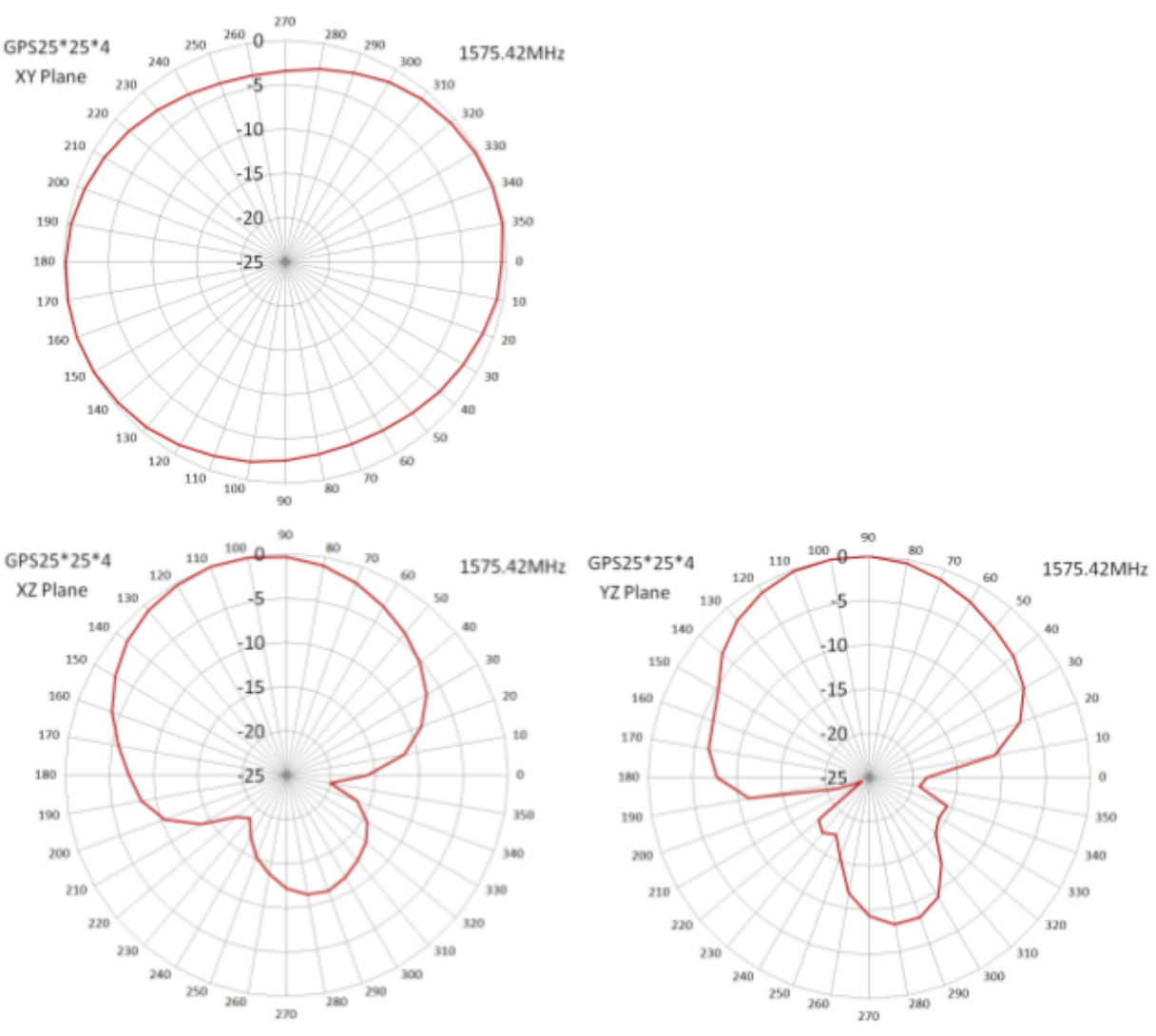
Radiation Pattern