Rating	20A 14VDC
Contact Resistance	50m ohm Max.
Insulation Resistance	DC 500V 100M ohm Min.
Dielectric Strength	AC 1500V 1 minute
Operation Temperature	−25°C~85°C
Function Switch	4P SPST ON−OFF (2 LEDS)

Mounting Hole

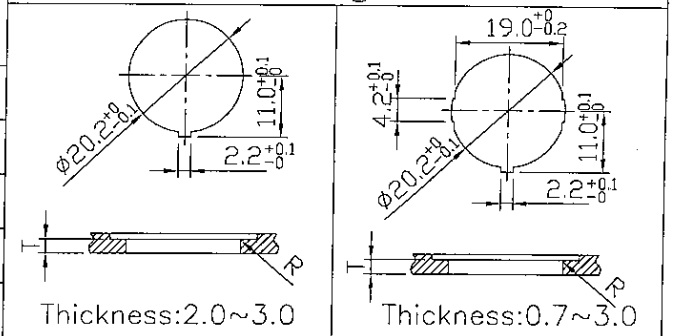

Circuit Diagram

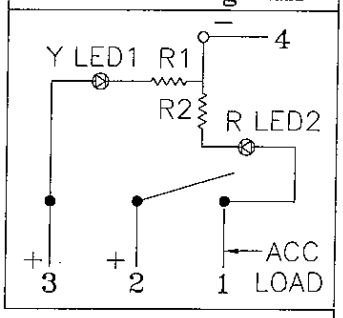

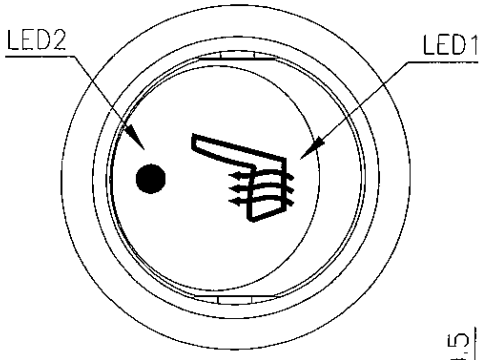

MATERIAL:
Frame: Black,Nylon−66
Actuator: White diffused,PC
with Black painting
LED1: Amber(Yellow) light
in seat−heating symbol
LED2: Red light
in dot symbol (when load is on)

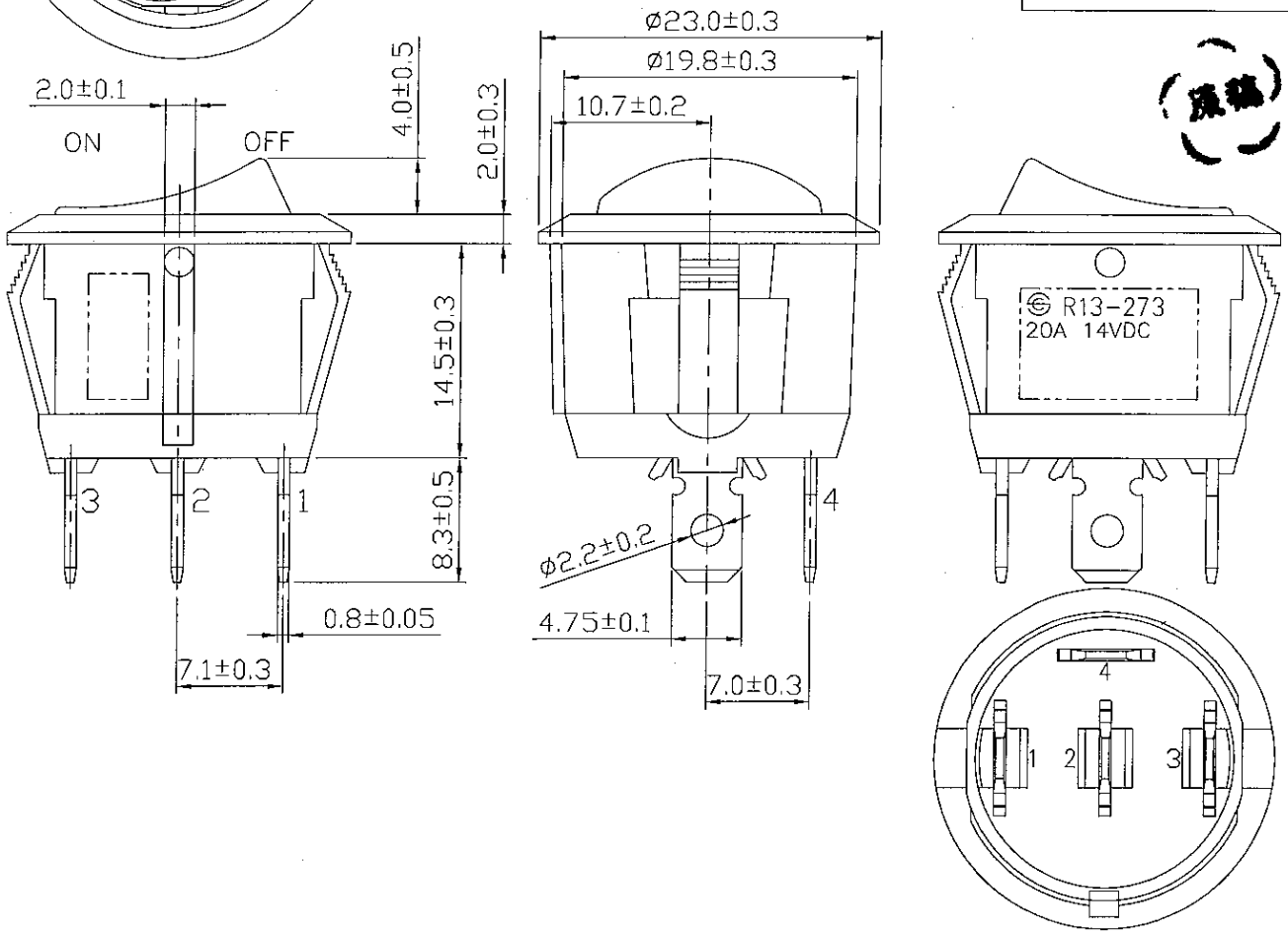

C3\R13-273\R13-273AL-02-BBYR-SPEC

Date	Name	Descriptions					NO
							△
							△

Drawing	Check	Approval	SCI BOM No.	1824596	Model Name	ROCKER SWITCH	
B.S.Wang	王伯山		Customer No.		Model No.	R13-273AL-02-BBYR	REV.
10/8/'09	10/8/09	10/8/09	Unit	mm	SHIN CHIN INDUSTRIAL CO., LTD.		0