MOTOROLA
SEMICONDUCTOR
TECHNICAL DATA

MC8T95 (MC6885)
MC8T96 (MC6886)
MC8T97 (MC6887)
MC8T98 (MC6888)

HEX THREE-STATE BUFFER/INVERTERS

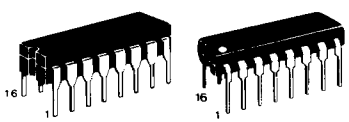

L SUFFIX
CERAMIC PACKAGE
CASE 620

P SUFFIX
PLASTIC PACKAGE
CASE 648

HEX THREE-STATE BUFFER INVERTERS

This series of devices combines three features usually found desirable in bus-oriented systems: 1) High impedance logic inputs insure that these devices do not seriously load the bus; 2) Three-state logic configuration allows buffers not being utilized to be effectively removed from the bus; 3) Schottky technology allows high-speed operation.

The devices differ in that the non-inverting MC8T95/MC6885 and inverting MC8T96/MC6886 provide a two-input Enable which controls all six buffers, while the non-inverting MC8T97/MC6887 and inverting MC8T98/MC6888 provide two Enable inputs – one controlling four buffers and the other controlling the remaining two buffers.

The units are well-suited for Address buffers on the M6800 or similar microprocessor application.

- High Speed – 8.0 ns (Typ)
- Three-State Logic Configuration
- Single +5 V Power Supply Requirement
- Compatible with 74LS Logic or M6800 Microprocessor Systems
- High Impedance PNP Inputs Assure Minimal Loading of the Bus

MICROPROCESSOR BUS EXTENDER APPLICATION

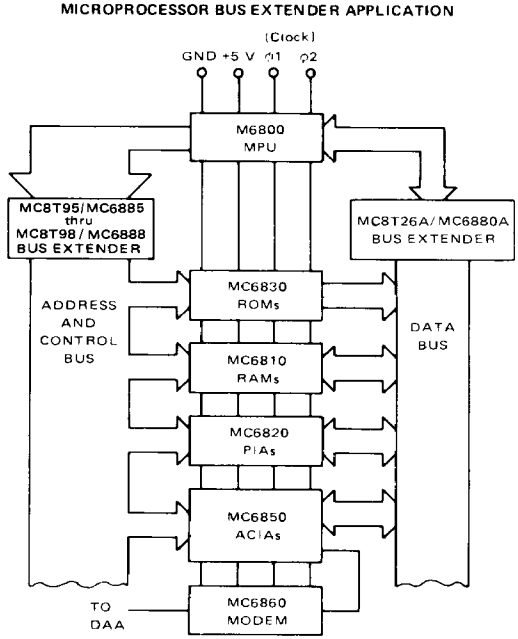

INPUT EQUIVALENT CIRCUIT

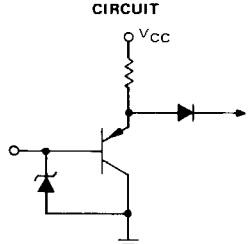

OUTPUT EQUIVALENT CIRCUIT

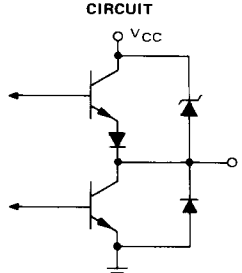

ORDERING INFORMATION
(Temperature Range for the following devices = 0 to +75°C)

DEVICE	ALTERNATE	PACKAGE
MC8T95L	MC6885L	Ceramic DIP
MC8T96L	MC6886L	Ceramic DIP
MC8T97L	MC6887L	Ceramic DIP
MC8T98L	MC6888L	Ceramic DIP
MC8T95P	MC6885P	Plastic DIP
MC8T96P	MC6886P	Plastic DIP
MC8T97P	MC6887P	Plastic DIP
MC8T98P	MC6888P	Plastic DIP

7

MAXIMUM RATINGS (T_A = 25°C unless otherwise noted.)

Rating	Symbol	Value	Unit
Power Supply Voltage	V_{CC}	8.0	Vdc
Input Voltage	V_I	5.5	Vdc
Operating Ambient Temperature Range	T_A	0 to +75	°C
Storage Temperature Range	T_{stg}	-65 to +150	°C
Operating Junction Temperature Plastic Package Ceramic Package	T_J	 150 175	°C

PIN CONNECTIONS AND TRUTH TABLES

MC8T95/MC6885

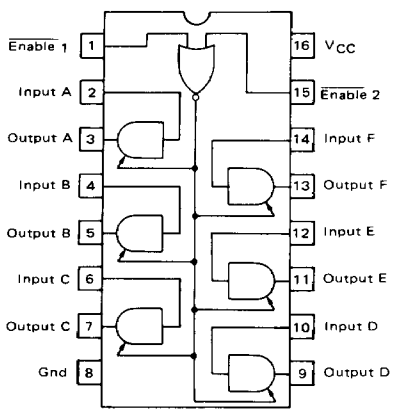

Enable 2	Enable 1	Input	Output
L	L	L	L
L	L	H	H
L	H	X	Z
H	L	X	Z
H	H	X	Z

MC8T96/MC6886

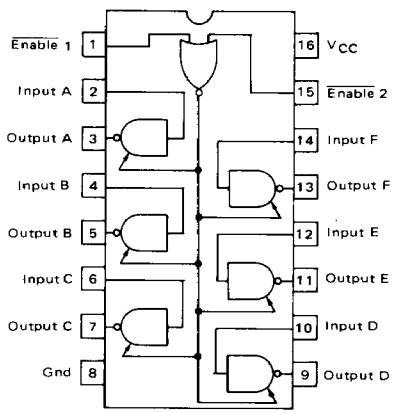

Enable 2	Enable 1	Input	Output
L	L	L	H
L	L	H	L
L	H	X	Z
H	L	X	Z
H	H	X	Z

MC8T97/MC6887

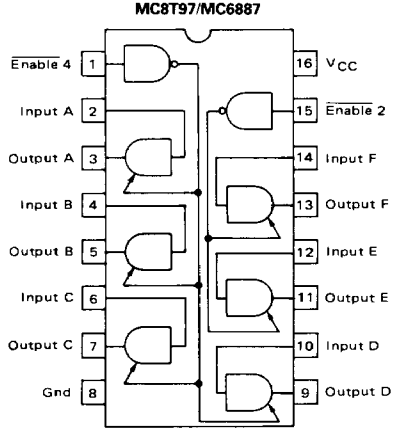

Enable	Input	Output
L	L	L
L	H	H
H	X	Z

L = Low Logic State
H = High Logic State
Z = Third (High Impedance) State
X = Irrelevant

MC8T98/MC6888

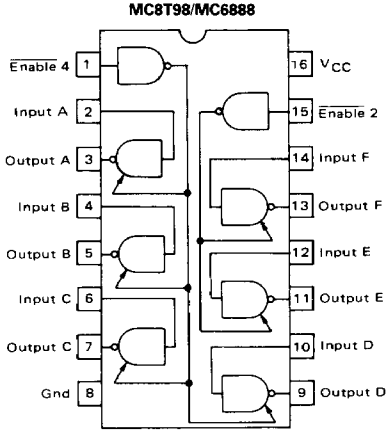

Enable	Input	Output
L	L	H
L	H	L
H	X	Z

ELECTRICAL CHARACTERISTICS (Unless otherwise noted, $0^{o}C \leqslant T_A \leqslant 75^{o}C$ and $4.75\ V \leqslant V_{CC} \leqslant 5.25\ V$)

Characteristic	Symbol	Min	Typ	Max	Unit
Input Voltage – High Logic State (V_{CC} = 4.75 V, T_A = 25°C)	V_{IH}	2.0	–	–	V
Input Voltage – Low Logic State (V_{CC} = 4.75 V, T_A = 25°C)	V_{IL}	–	–	0.8	V
Input Current – High Logic State (V_{CC} = 5.25 V, V_{IH} = 2.4 V)	I_{IH}	–	–	40	μA
Input Current – Low Logic State (V_{CC} = 5.25 V, V_{IL} = 0.5 V, $V_{IL(\bar{E})}$ = 0.5 V)	I_{IL}	–	–	-400	μA
Input Current – High Impedance State (V_{CC} = 5.25 V, $V_{IL(I)}$ = 0.5 V, $V_{IH(\bar{E})}$ = 2.0 V)	$I_{IH(\bar{E})}$	–	–	-40	μA
Output Voltage – High Logic State (V_{CC} = 4.75 V, I_{OH} = -5.2 mA)	V_{OH}	2.4	–	–	V
Output Voltage – Low Logic State (I_{OL} = 48 mA)	V_{OL}	–	–	0.5	V
Output Current – High Impedance State	I_{OZ}				μA
(V_{CC} = 5.25 V, V_{OH} = 2.4 V)		–	–	40	
(V_{CC} = 5.25 V, V_{OL} = 0.5 V)		–	–	-40	
Output Short-Circuit Current (V_{CC} = 5.25 V, V_O = 0) (only one output can be shorted at a time)	I_{OS}	-40	-80	-115	mA
Power Supply Current	I_{CC}				mA
(V_{CC} = 5.25 V) MC8T95, MC8T97, MC6885, MC6887		–	65	98	
MC8T96, MC8T98, MC6886, MC6888		–	59	89	
Input Clamp Voltage (V_{CC} = 4.75 V, I_{IC} = -12 mA)	V_{IC}	–	–	-1.5	V
Output V_{CC} Clamp Voltage (V_{CC} = 0, I_{OC} = 12 mA)	V_{OC}	–	–	1.5	V
Output Gnd Clamp Voltage (V_{CC} = 0, I_{OC} = -12 mA)	V_{OC}	–	–	-1.5	V
Input Voltage (I_I = 1.0 mA)	V_I	5.5	–	–	V

SWITCHING CHARACTERISTICS (V_{CC} = 5.0 V, T_A = 25°C unless otherwise noted.)

Characteristic	Symbol	MC8T95/97 MC6885/87			MC8T96/98 MC6886/88			Unit
		Min	Typ	Max	Min	Typ	Max	
Propagation Delay Time – High to Low State	t_{PHL}							ns
(C_L = 50 pF)		3.0	–	12	4.0	–	11	
(C_L = 250 pF)		–	16	–	–	15	–	
(C_L = 375 pF)		–	20	–	–	18	–	
(C_L = 500 pF)		–	23	–	–	22	–	
Propagation Delay Time – Low to High State	t_{PLH}							ns
(C_L = 50 pF)		3.0	–	13	3.0	–	10	
(C_L = 250 pF)		–	25	–	–	22	–	
(C_L = 375 pF)		–	33	–	–	28	–	
(C_L = 500 pF)		–	42	–	–	35	–	
Transition Time – High to Low State	t_{THL}							ns
(C_L = 250 pF)		–	10	–	–	10	–	
(C_L = 375 pF)		–	11	–	–	13	–	
(C_L = 500 pF)		–	14	–	–	15	–	
Transition Time – Low to High State	t_{TLH}							ns
(C_L = 250 pF)		–	32	–	–	28	–	
(C_L = 375 pF)		–	42	–	–	38	–	
(C_L = 500 pF)		–	60	–	–	53	–	
Propagation Delay Time – High State to Third State (C_L = 5.0 pF)	$t_{PHZ(\bar{E})}$	–	–	10	–	–	10	ns
Propagation Delay Time – Low State to Third State (C_L = 5.0 pF)	$t_{PLZ(\bar{E})}$	–	–	12	–	–	16	ns
Propagation Delay Time – Third State to High State (C_L = 50 pF)	$t_{PZH(\bar{E})}$	–	–	25	–	–	22	ns
Propagation Delay Time – Third State to Low State (C_L = 50 pF)	$t_{PZL(\bar{E})}$	–	–	25	–	–	24	ns

7

FIGURE 1 – TEST CIRCUIT FOR SWITCHING CHARACTERISTICS

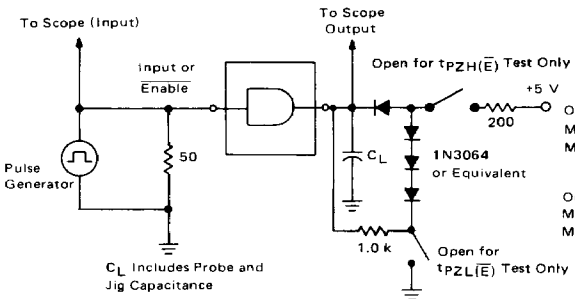

FIGURE 2 – WAVEFORMS FOR PROPAGATION DELAY TIMES INPUT TO OUTPUT

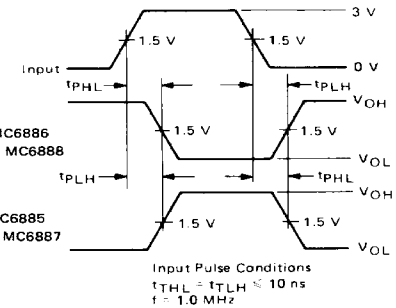

FIGURE 3 – WAVEFORMS FOR PROPAGATION DELAY TIMES – $\overline{\text{ENABLE}}$ TO OUTPUT

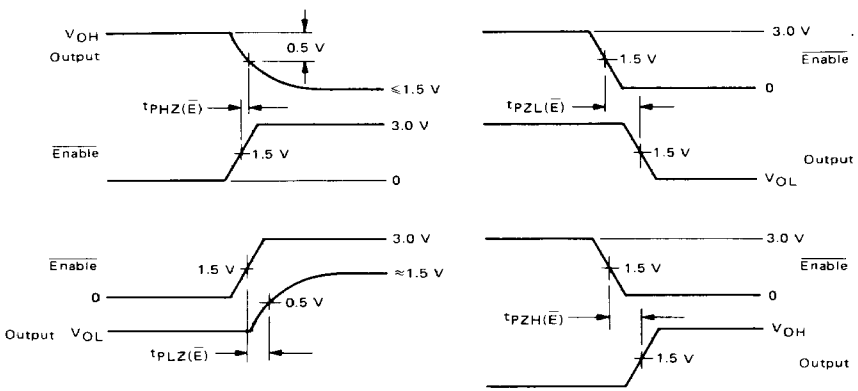

H = High-Logic State, L = Low-Logic State, Z = High Impedance State