Product Data Sheet Type: PR28/38/SE

Group: HEATSINKS Board Level

For single mounting

Width :	34.8 mm
Height :	12.5 mm
Length :	38 mm
Minimum thermal resistance :	10 K/W
For device :	TO 220|TO 218|TOP 3|TO
Device mounted by :	Screw
Heatsink mounted by :	Solder
Surface :	Black Anodised
Material :	AlMgSi0,5
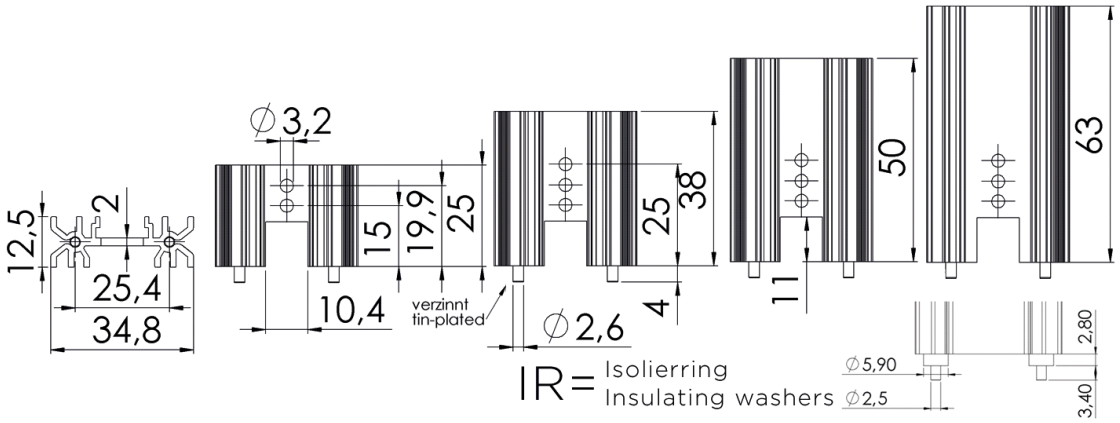
- Special extruded heatsink for semiconductor case TO220, TO202, TO218(TOP3)
- Aluminium, anodised black, solderable
- Standard heights: 25, 38, 50 and 63 mm
- 3 x 3.2 mm holes for semiconductor assembly
- Heatsink solderable by tin plated solder pins