Rating	Input:12V/24 DC Output:5V DC 2.4A+2.4A max.
Insulation Resistance	DC 500V 100MΩ Min.
Dielectric Strength	AC 1500V 1 minute
Operating Temperature	-20℃~45℃

Mounting Hole

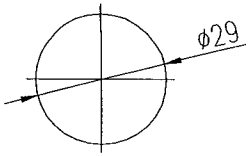

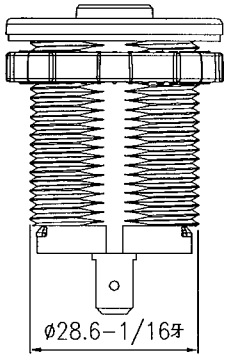

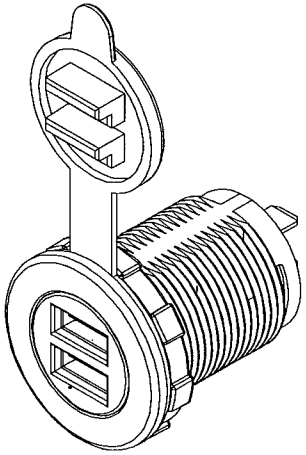

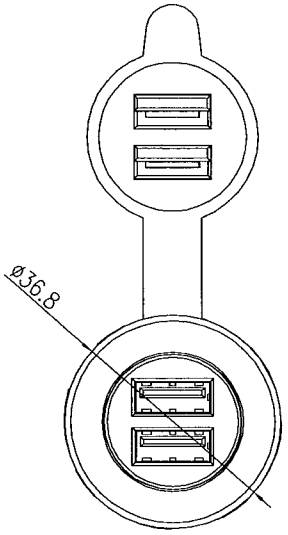

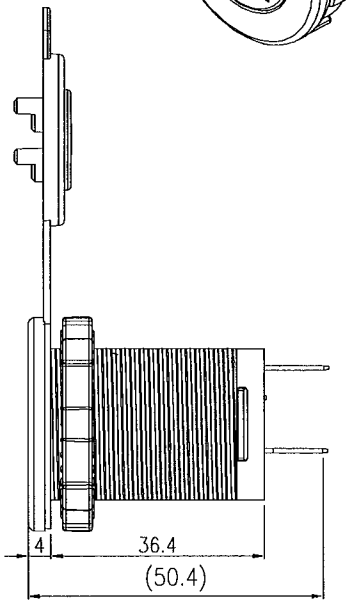

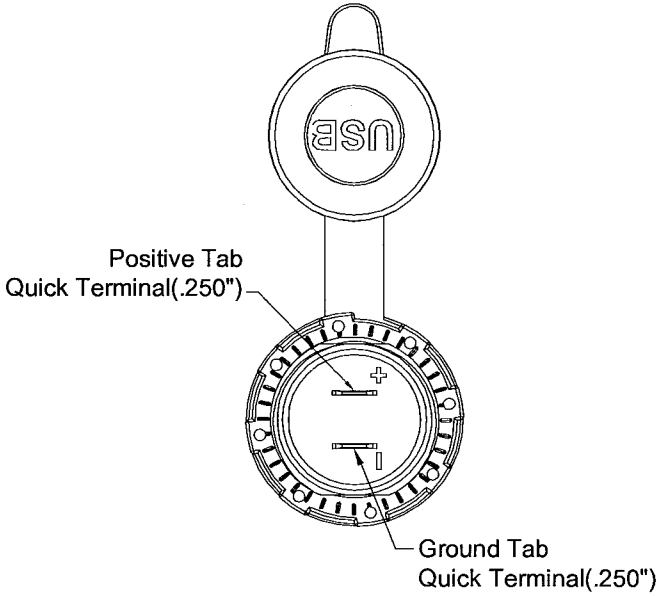

Tolerances ±0.3 Unless Otherwise Specified

Date	Name	Description	No.
			△
			△

Drawn	Checked	Approved	SCI BOM No.	1251340	Model Name	Triple outlet socket	
Rock Hsu			Customer No.		Model No.	A13-194B2-BB3	Rev.
05/24/"16			Unit	mm	© Shin Chin Industrial Co., Ltd.		0