LR40992 Pulse Dialer CMOS LSI

Description

The LR40992 is a CMOS LSI for pulse dialer with redial which integrates a CR oscillator as a frequency reference.

Features

1. Make ratio: 34/40% pin-selectable
2. Pulse rate: 10/20pps pin-selectable
3. Pulse output: "0" true
4. Mute output: "0" true
5. 17-digit redial with either * or # input
6. Inter-digital pause: 800ms (10pps)
7. Uses a ceramic oscillator as a frequency reference
8. Direct telephone line operation
9. Uses either a standard 2-of-7 matrix keyboard or a single contact keyboard
10. Mute signal generated on pulse signal
11. 18-pin dual-in-line package

Pin Connections

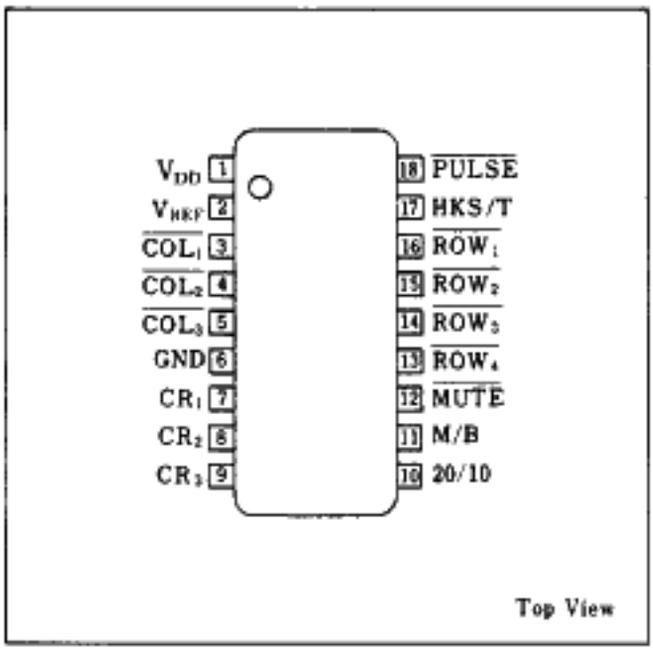

Block Diagram

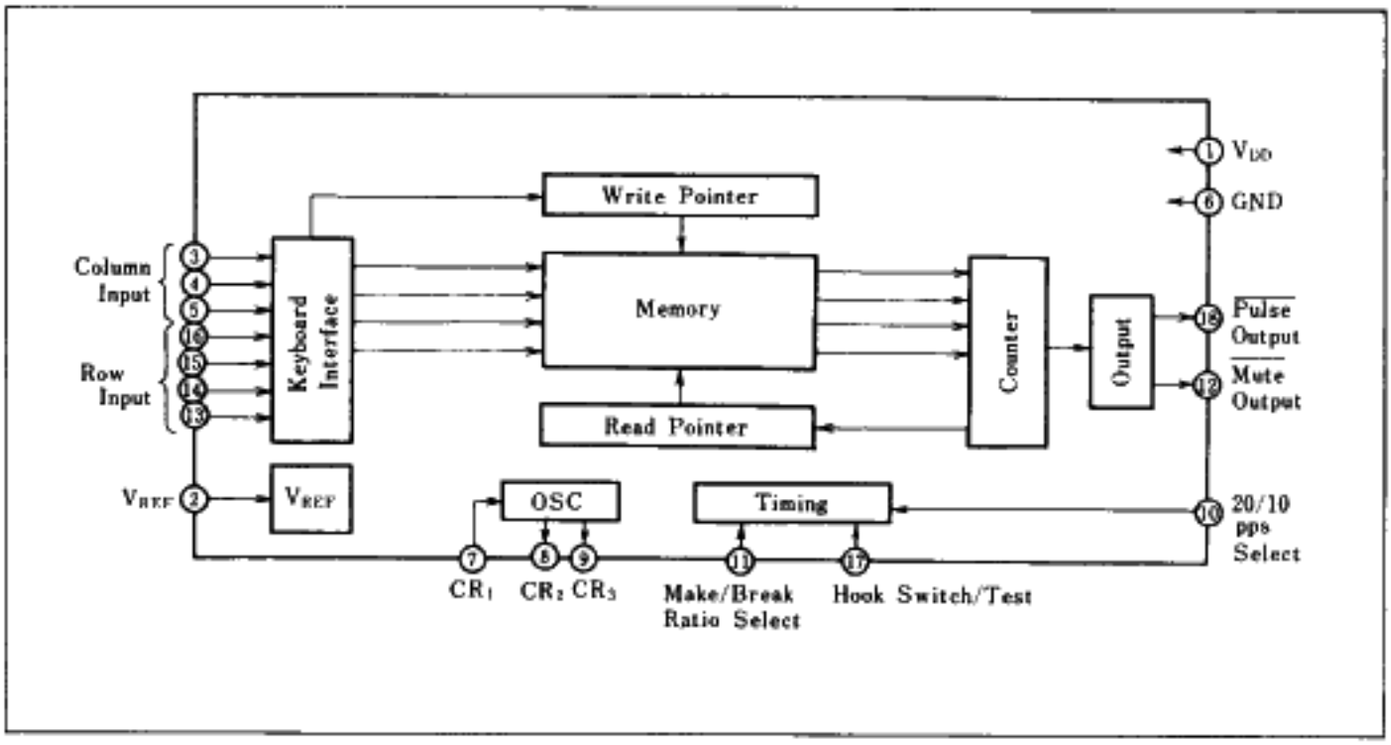

Absolute Maximum Ratings

Parameter	Symbol	Rating	Unit	Note
Supply voltage	V_{DD}	−0.3 to +6.2	V	1
Operating temperature	T_{opr}	−30 to +60	℃	
Storage temperature	T_{stg}	−55 to +150	℃	
Maximum power dissipation	P_D	500	mW	2
Maximum pin voltage	V_{IN1}	−0.3	V	3
	V_{IN2}	+0.3	V	4

Note 1 : Referenced to GND.
Note 2 : Ta=25℃.
Note 3 : The maximum applicable voltage on any pin with respect to GND.
Note 4 : The maximum applicable voltage on any pin with respect to V_{DD}.

Recommended Operating Conditions

Parameter	Symbol	Rating	Unit
Supply voltage	V_{DD}	2.5 to 6.0	V

DC Characteristics

(Ta=−30 to +60℃)

Parameter	Symbol	Conditions	MIN.	TYP.	MAX.	Unit	Note
Key contact resistance	R_{KI}				1	kΩ	
Key board capacitance	C_{KI}				30	pF	
Input voltage	K_{IH}	2-of-7 input mode	$0.8V_{DD}$		V_{DD}	V	1
	K_{IL}		GND		$0.2V_{DD}$	V	
$\overline{MUTE}$ sink current	I_{ML}	V_{DD}=2.5V, V_{OUT}=0.5V	500			μA	2
$\overline{PULSE}$ sink current	I_P	V_{DD}=2.5V, V_{OUT}=0.5V	1.0			mA	3
V_{REF} output current	I_{REF}	$V_{DD}-V_{REF}$=6V	1.0	7.0		mA	4
Memory retention current	I_{MR}	All outputs in no-load state		0.7		μA	
Operating current	I_{OP}	All outputs in no-load state		100	150	μA	
Key pull-up resistance	K_{IRU}	V_{DD}=6.0V		100		kΩ	
Key pull-down resistance	K_{IRD}	V_{IN}=4.8V		4		kΩ	
MUTE, PULSE leakage	I_{LKG}	V_{DD}=6.0V, V_{OUT}=6.0V		0.001	1	μA	

Note 1: Applies to key input pins ($\overline{ROW_1}$-$\overline{ROW_4}$, $\overline{COL_1}$-$\overline{COL_3}$)
Note 2: Applies to $\overline{MUTE}$ output pin.
Note 3: Applies to $\overline{PULSE}$ output pin.
Note 4: Applies to V_{REF} pin. (Refer to Figure 1)

AC Characteristics

Parameter	Symbol	Conditions	MIN.	TYP.	MAX.	Unit	Notes
Oscillator frequency	f_{OSC}			4.0		kHz	1
Frequency stability	Δf	V_{DD}=2.5 to 3.5V		±4		%	
Frequency stability	Δf	V_{DD}=3.5 to 6.0V		±4		%	
Frequency stability (with V_{REF} used)	Δf	I_{REF}=250 to 500 μA		±2.5		%	
Output pulse rate	PR	Pin 10=V_{DD}/GND		20/10		pps	
Key input debounce time	t_{DB}			10		ms	2
Key input time	t_{KD}		40			ms	2, 3
2×Key input rollover time	t_{KR}		5			ms	2
Pulse break time	t_B	Pin 9=V_{DD}/GND		66/60		ms	
Inter-digital pause Pre-digital pause	t_{IDP} t_{PDP}			800		ms	2
Mute valid after last outpulse	t_{MO}			5		ms	2
On-Hook time required to clear memory	t_{OH}		300			ms	2

Note 1 : External RC values are: R_S=2MΩ, R=220Ω and C=390pF.
Note 2 : These times are directly proportional to the oscillator frequency.
Note 3 : Debounce plus oscillator start-up time<40ms.

Test Circuit

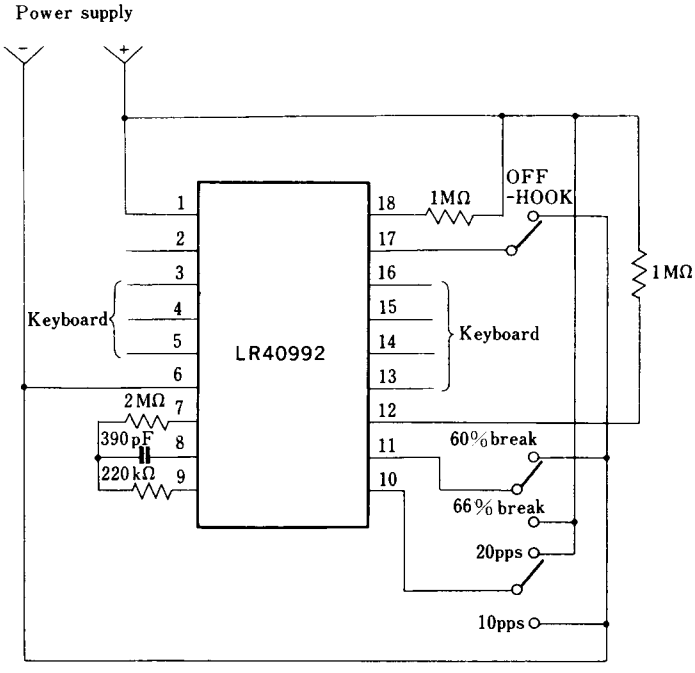

Functional Description

The LR40992 is a monolithic CMOS integrated circuit which uses an inexpensive CR oscillator for its frequency reference and provides all the features required for implementing a pulse dialer with redial. It operates directly off the telephone line supply and converts 2-of-7 keyboard inputs into pulse signals simulating a rotary telephone dial. When not outpulsing, the LR40992 consumes only microamperes of current.

Keyboard logic is totally static so that the LR40992 will not introduce noise into the telephone system. Two outputs, one to pulse the telephone line and one to mute the receiver, are provided to implement the pulse dialer function.

When Off-Hook, the LR40992 senses a key down condition, verifies that only one key is depressed and then enters the key's code into an on-chip memory.

The FIFO (First In First Out) memory will store up to 17 digits, and allows keystrokes to be entered at rates comparable to tone dialing telephones. Entering the first digit starts a pre-digital pause counter and clears the memory buffer. At the end of the pre-digital pause, outpulsing begins. As digits are entered during the outpulsing period they will also be stored in the memory. Outpulsing will continue until all entered digits have been dialed. The first 17 digits entered will be stored in the on-chip redial memory and can be redialed by pressing either # or *, provided that the receiver has been On-Hook for the minimum t_{OH} (refer to the AC Characteristics section).

When On-Hook, key inputs will not be recognized because the oscillator is disabled. This oscillator inhibit prevents the circuit from drawing excessive current when On-Hook.

Pin Description

V_{DD} (Pin 1)

This is the positive supply pin. The voltage on this pin is measured relative to GND and is supplied from a 150μA current source. This voltage must be regulated to less than 6.0 volts.

V_{REF} (Pin 2)

The V_{REF} output provides a reference voltage that tracks internal parameters of the LR40992. V_{REF} provides a negative voltage reference to the V_{DD} supply. Its magnitude will be approximately 0.6 volts greater than the minimum operating voltage of each particular LR40992.

The typical application would be to connect the V_{REF} pin to the GND pin (pin 6). The supply to the V_{DD} pin (pin 1) should then be regulated to 150 μA (I_{op} max). With this amount of supply current, proper operation of the LR40992 is guaranteed.

The internal circuitry is shown in Figure 1 with its associated I-V characteristics.

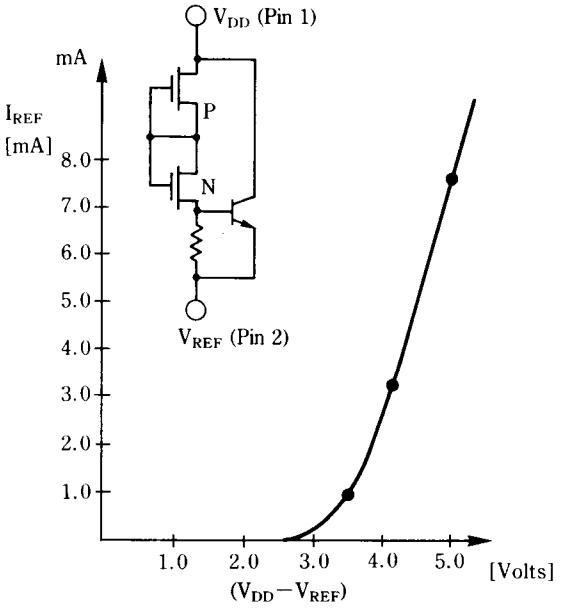

Fig. 1 V_{REF} Typical I-V Characteristics

Keyboard Inputs (Pins 3, 4, 5, 13, 14, 15, 16)

The LR40992 incorporates an innovative keyboard scheme that allows either the standard 2-of-7 keyboard with negative common or the inexpensive single contact (Form A) keyboard to be used.

A valid key entry is defined by either a single row being connected to a single column or GND being simultaneously presented to both a single row and column.

When in On-Hook mode, the row and column inputs are held high and no keyboard inputs are accepted. When Off-Hook, the keyboard is completely static until the initial valid key input is sensed. The oscillator is then enabled and the rows and columns are alternately scanned (pulled high, then low) to verify that the input is valid. To be accepted, the input must remain valid continuously for 10ms of debounce time.

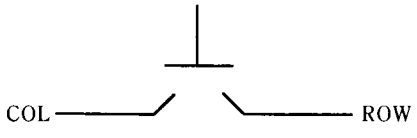

Form A Type Keyboard

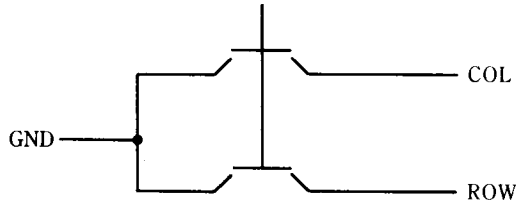

2-of-7 Matrix Keyboard
Negative Common

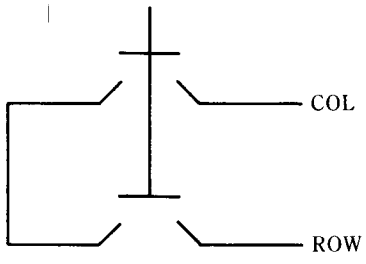

2-of-7 Matrix Keyboard

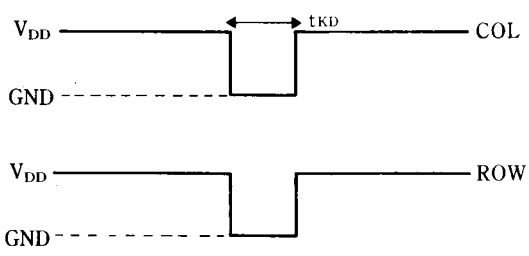

Fig. 2 Keyboard configurations

Oscillator (Pins 7, 8, 9)

The LR40992 contains on-chip inverters to provide an oscillator which will operate with a minimum of external components. Figure 3 shows the on-chip configuration with the necessary external components. Optimum stability occurs with the ratio $K=R_s/R$ equal to 10.

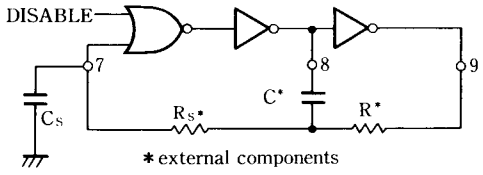

Fig. 3 Oscillator configuration

The oscillator period is given by:

$$T=RC[1.386+(3.5KC_s/C-(2K/(K+1))\ \ln(K/(1.5K+0.5))]$$

where C_s is the stray capacitance on pin 7. Accuracy and stability will be enhanced with this capacitance minimized.

GND (Pin 6)

This is the negative supply pin and is normally tied to V_{REF} (See V_{REF} paragraph).

20/10 pps (Pin 10)

Tying this pin M/B to GND will select an output pulse rate of 10 pps. Tying to V_{DD} will select 20 pps.

Make/Break Select (Pin 11)

The Make/Break ratio may be selected by connecting the M/B pin to either the V_{DD} or GND supply. The two popular ratios from which the user can choose are indicated below.

INPUT	MAKE	BREAK
V_{DD}(Pin 1)	34%	66%
GND (Pin 6)	40%	60%

$\overline{\text{Mute}}$ Output (Pin 12)

The $\overline{\text{Mute}}$ output is a complementary CMOS transistor designed to drive an external bipolar transistor. This circuitry is used to mute the receiver during outpulsing.

As shown in Timing Diagram, the LR40992 Mute output turns on (pulls to the GND supply) at the beginning of the pre-digital pause and turns off (goes to an open circuit) following the last break. The delay from the end of the last break until the Mute output turns off is the mute overlap, specified as t_{MO}.

Test/On-Hook Switch Input (Pin 17)

The "Test" or "On-Hook" input of the LR40992 has a 100kΩ pull-up to the positive supply. A V_{DD} input or allowing the pin to float sets the circuit in into On-Hook or test mode while a GND input sets it in the Off-Hook or normal mode.

When Off-Hook, the LR40992 will accept key inputs and outpulse the digits in normal fashion. Upon completion of the last digit, the oscillator is disabled and the circuit stands by for additional inputs.

Switching the LR40992 to On-Hook while it is outpulsing causes the remaining digits to be outpulsed at 100 × the normal rate (M/B ratio is then 50/50). This features provides a means of rapidly testing the device and is also an efficient method by which the circuitry can be reset. When the outpulsing in this mode, which can take up to 300ms, is completed, the circuit is de-activated and will require only the current necessary to sustain the memory and Power-Up-Clear detect circuitry (refer to the electrical specifications).

Upon returning Off-Hook, a negative transistion on the Mute Output will insure that the speech network is connected to the line. If the first key entry is either a * or #, the number sequence stored on-chip will be outpulsed. Any other valid key entries will clear the memory and outpulse the new number sequence.

$\overline{\text{Pulse}}$ Output (Pin 18)

The Pulse output is an open-drain N-channel transistor designed to drive an external bipolar transistor. These transistors would normally be used to pulse the telephone line by disconnecting and connecting the network.

The LR40992 $\overline{\text{Pulse}}$ output is an open circuit during make and pulls to the GND supply during break.

Timing Diagram

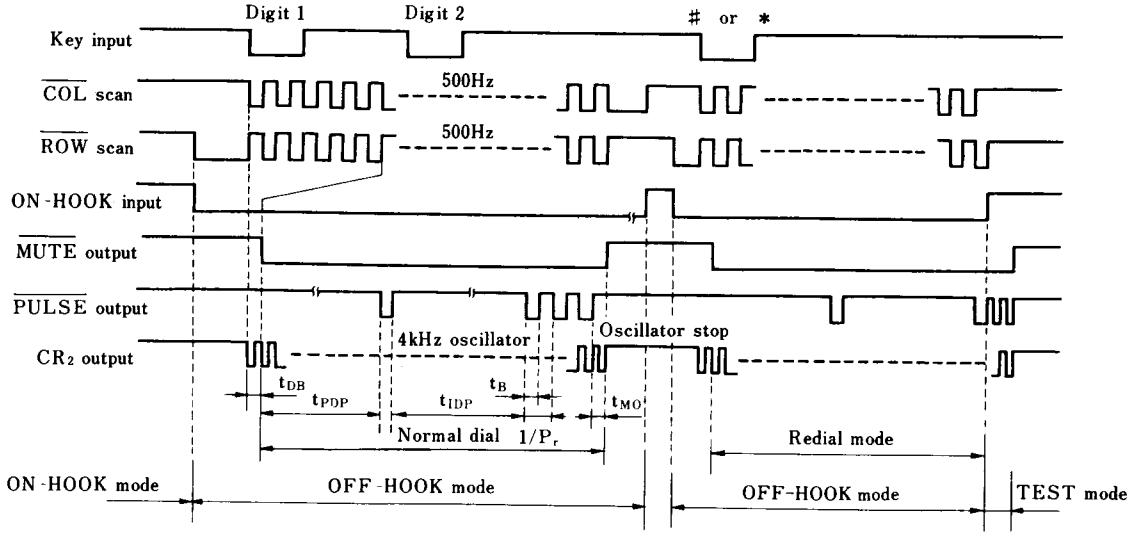

System Configuration Example

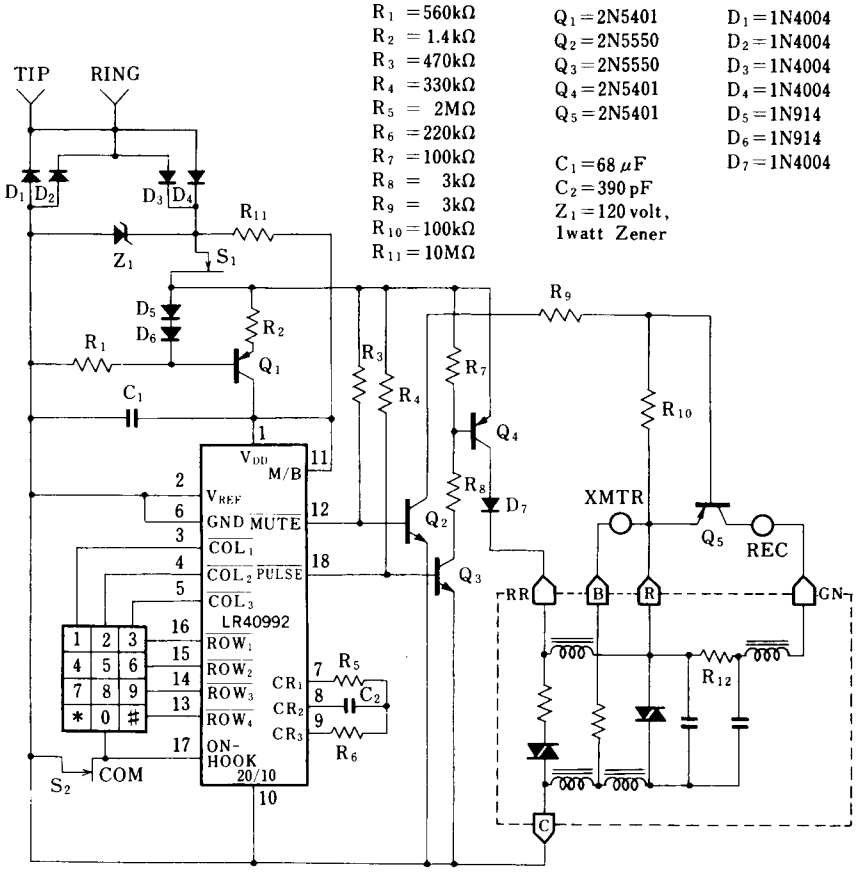

This datasheet has been downloaded from:

www.DatasheetCatalog.com

Datasheets for electronic components.